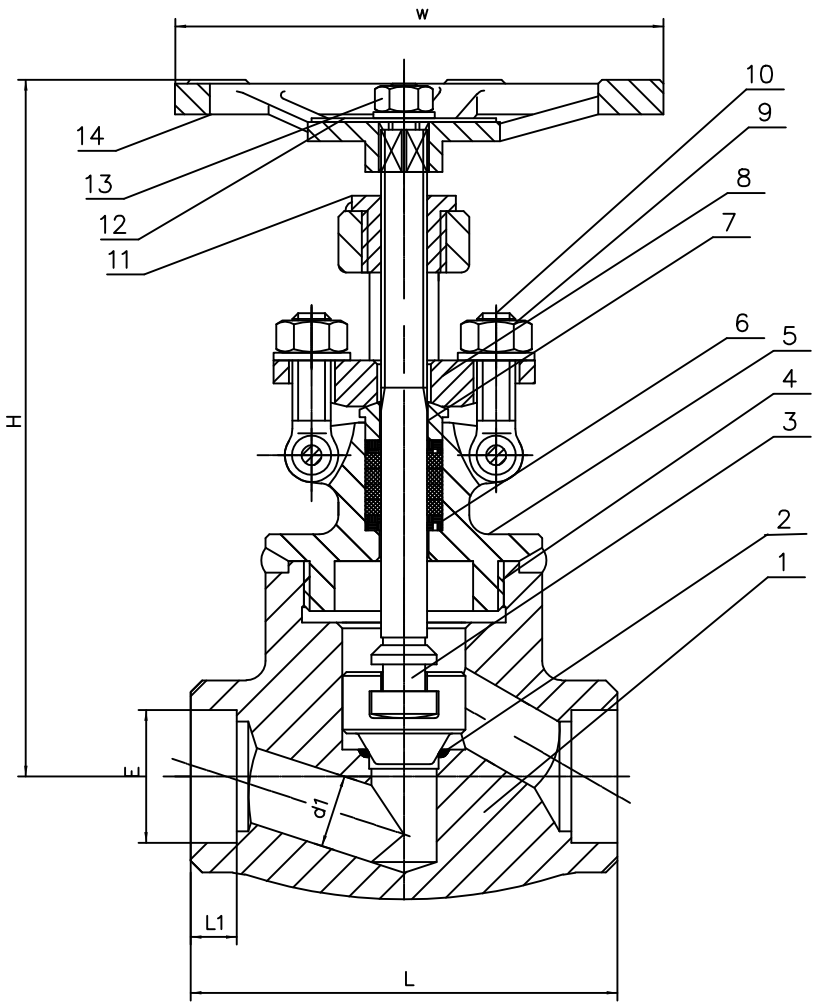


| Performance Specification | | | |
|---|---|---|---|
| Nominal Pressure | | 1500LB | MPa |
| Test Pressure | Shell Test | 38.4 | |
| | Sealing Test | 28.1 | |
| | Air Tight Test | 0.7 | |
| Applicable Temperature | | −29−425°C | |
| Applicable Medium | | Oil, Steam and Water | |

| | | | | | | |
|---|---|---|---|---|---|---|
| 2” | 40 | 200 | 15.9 | 61.2 | 355 | 200 |
| NPS | d1 | L | L1 | E | H | w |

| No. | Name | Material |
|---|---|---|
| 1 | Body | A105+STL |
| 2 | DISC | F6+STL |
| 3 | STEM | F6 |
| 4 | GASKET | SS+GRAPHITE |
| 5 | Bonnet | A105 |
| 6 | Packing | Flexible Graphite |
| 7 | GLAND | 410 |
| 8 | GLAND FLANGE | A105 |
| 9 | GLAND NUT | A194 2H |
| 10 | GLAND BOLT | A193 B7 |
| 11 | YOKE NUT | ASTM A1053 |
| 12 | NAMEPLATE | AL |
| 13 | NUT | A194 2H |
| 14 | HANDWHEEL | A197 |

Technical Requirement

1.Design and manufacture to API 602
2.Face−to−face dimension to Mfr std
3.Ends Connection dimension to ASME B16.11
4.Inspection and test to API598

J61Y−1500LbHP DN50

A 1:1

J61Y−1500Lb